Academic year 2022-23 (Odd Semester)

DEPARTMENT OF ELECTRONICS & COMMUNICATION ENGINEERING

Date	19th JAN 2023	Maximum Marks	10+50
Course Code	21EC34	Duration	110 Mins
Sem	III	CIE - I	
ANALYSIS AND DESIGN OF DIGITAL CIRCUITS			

PART A

Q No.	Questions	M	BT	CO
1.	Find the BCD to Excess-3 code for 369.	1	2	2
2.	What is the 2's complement of $(-28)_{10}$ in hexadecimal representation?	2	3	1
3.	The standard noise margin of TTL logic family is _____.	1	1	1
4.	The standard TTL gates have the following values for the currents: I_{OH}= 280 μA , I_{LH} =35 μA, I_{OL} = 12 mA, I_{IL} = 1.5mA then, the fanout of a gate is _____.	1	3	3
5.	It is required to design 5:32 decoder. Identify the number of 2:4 decoder 3:8 decoders required for this design.	1	3	2
6.	A 4 X 1 MUX is used to implement a 3-input Boolean function as shown in Fig.6. The Boolean function F(A,B,C) implemented is_____. 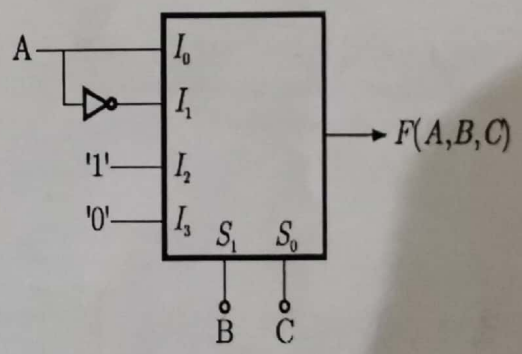 Fig.6	2	3	3
7.	A priority encoder has 8 active-LOW inputs (I_7 to I_0) and 3 active-LOW outputs (a,b,c). What would be the state of the three outputs if inputs I_4 and I_5 are LOW and all other inputs are HIGH when the priority is from I_7 to I_0?.	2	3	2

PART- B

QNo.	Questions	M	BT	CO
1.a	Minimize the given Boolean expression using Quine-McCluskey tabular method : F(A,B,C,D)= $\sum$m(1,2,3,5,9,12,14,15) +d(4,8,11).	6	3	1
1.b	Perform BCD addition of i)$(24)_{10}$+$(38)_{10}$ ii) $(127)_{10}$+$(99)_{10}$	4	2	2

Scanned with CamScanner

2.a	In a certain application, four inputs A,B,C,D (both true and complement forms available) are fed to logic circuits, producing an output F, which operates a relay. The relay turns on when F(ABCD) = 1 for the following states of the inputs (ABCD): 0000,0100, 0010, 0101,0110,1101 and 1110. States 1000 and 1001do not occur and for the remaining states the relay is off. Minimize F with the help of a K Map and realize it using a minimum number NAND gates.	5	3	2
2.b	With a neat circuit diagram, explain working of 3 input NAND using Totem-Pole output TTL.	5	2	1
3.a	Following Fig.3a shows the implementation of full adders in a 16-bit ripple carry adder realized using 16 identical full adders. The propagation delay of the XOR, AND and OR gates are 20ns, 15ns and 10ns respectively. Calculate the worst case delay of this 16 bit adder? 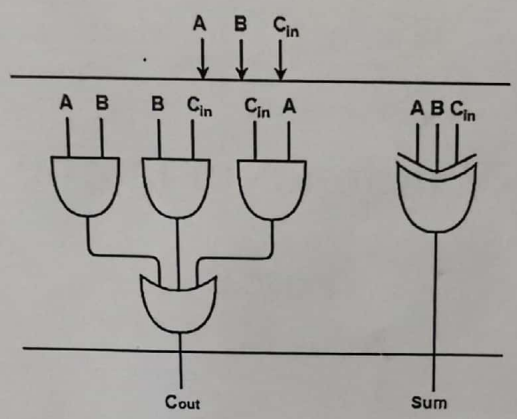 Fig. 3a	5	3	2
3.b	Design a 4 –to- 2 priority encoder using basic gates, where priority levels are given as MSB to LSB.	5	3	4
4.a	With a help of carry generation and carry propagation, design and draw the carry-look ahead circuit. Write the block diagram of a 4-bit carry-look-ahead adder. Mention the advantages and disadvantages of carry look ahead adder.	6	2	3
4.b	Design a combinational circuit using active low output decoder with active low enable input. The three input variables are x, y, and z. The three outputs are A, B and C. When the binary input is 0, 1, 2 and 3, the binary output is one greater than the input. When the binary input is 4, 5, 6 and 7, the binary output is one less than the input.	4	3	2
5.a	Design 3x4 multiplier using parallel adders and logic gates.	6	3	2
5.b	Implement the following Boolean function with a 4 × 1 multiplexer and external gates. Connect inputs A and B to the selection lines. $F(A, B, C, D) = \sum(1, 3, 4, 11, 12, 13, 14, 15)$	4	3	3

BT-Blooms Taxonomy, CO-Course Outcomes, M-Marks

Marks Distribution	Particulars		CO1	CO2	CO3	CO4	L1	L2	L3	L4	L5	L6
	Quiz/Test	Max Marks	14	26	15	5	1	16	38	--	--	--

****

Scanned with CamScanner

RV College of Engineering
Autonomous Institution Affiliated to Visvesvaraya Technological University, Belagavi
Approved by AICTE, New Delhi

Academic year 2022-2023 (Odd Sem)

DEPARTMENT OF
Electronics and Communication Engineering
(Common to ECE,ETE,EEE,EIE)

Date	21/02/2023	**Maximum Marks**	60
Course Code	21EC34	**Duration**	110 Mins
Sem	III Semester	CIE 2	

ANALYSIS AND DESIGN OD DIGITAL CIRCUITS

Instructions to candidates:

i. *Part A must be answered within the first two pages of answer book.*

ii. *Assume the suitable data for missing values*

	PART-A	**M**	**BT**	**CO**
1	Asynchronous counters are _____than synchronous counters.	1	1	1
2	Consider the D-Latch shown in the Fig.2, which is transparent when its clock input **CK** is high and has zero propagation delay. The clock signal **CLK1** has a 50% duty cycle and **CLK2** is a one-fifth period delayed version of **CLK1**. The duty cycle at the output latch in percentage is _____. 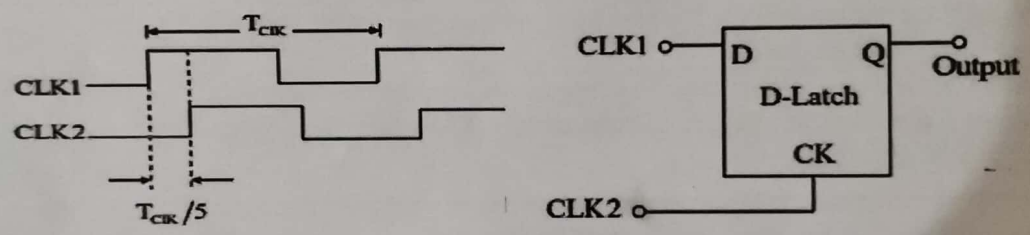 Fig.2	2	2	1
3	A **mod-n** counter using a synchronous binary up-counter with synchronous clear input is shown in the Fig.3. The value of **n** is _____. 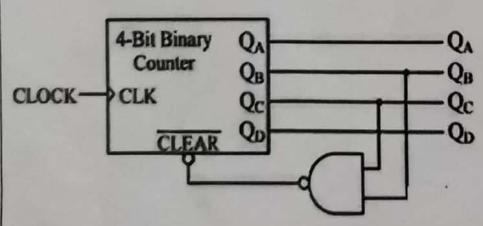 Fig.3 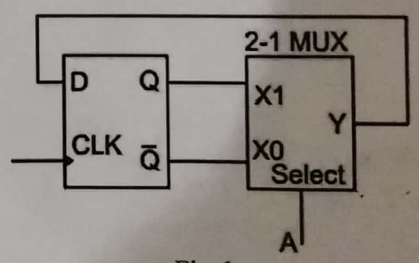 Fig.6	1	3	2
4	Five JK flip - flops are cascaded to for 5-bit ripple counter with outputs $Q_4Q_3Q_2Q_1Q_0$. Clock frequency of 1 MHz is used in the design. The frequency at which Q_3 generate output is _____.	1	2	3
5	A SR-FF can be converted into a T- FF by connecting Q to ____and Q' to _____.	1	2	2
6	Write state diagram of the sequential circuit given in Fig.6.	2	2	2
7	For the circuit diagram shown in the Fig.7, write timing waveform of output Y.	2	3	4
	PART-B			
1a	Design a 6-bit magnitude comparator by using IC-7485.	4	1	1

Scanned with CamScanner

Academic year 2022-2023 (Odd Sem)

1b	Design and explain the operation of positive edge triggered D-FF with the help of timing diagram, characteristic table.	6	3	3
2a	For the state equations given, design a synchronous sequential circuit using D-flip flops. Consider x as input and y as output. Write the state diagram for the same with the help of state table. A(t+1) = A(t)x+B(t)x B(t+1) = A'(t)x y = (A(t)+B(t))x'	6	2	2
2b	Design a frequency divider circuit to obtain a frequency of 2KHz using T-flip flops such that the reference frequency is 64KHz.	4	2	2
3	An experiment is set up to design a digital LOCK system with an input control button B and output UNLOCK. The digital LOCK uses two state variables to control the operation such that the state is incremented to the next state only if control input B is asserted. The LOCK system produces the output UNLOCK for the odd parity in each state whenever the control input B asserted. Write the state diagram, state table and sequential circuit for the same using JK flip flops.	10	4	4
4	Design a synchronous counter using T-flip flops such that it counts the sequence 1-3-5-7-9-11-13-15-1-3-5-7-9-.....and so on. Avoid Lock out condition in the design.	10	3	4
5a	For the state diagram shown in Fig. 5a, perform state reduction with the help for state table. Write reduced state diagram.	5	3	3
5b	A SK flip -flop has four operations: clear to 0, no change, complement and set to 1, when inputs S and K are 00, 01, 10, and 11 respectively. Show how the SK flip-flop can be converted to a JK flip-flop.	5	2	3

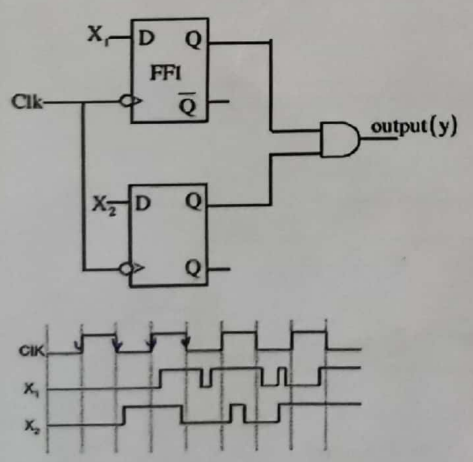

Fig. 7

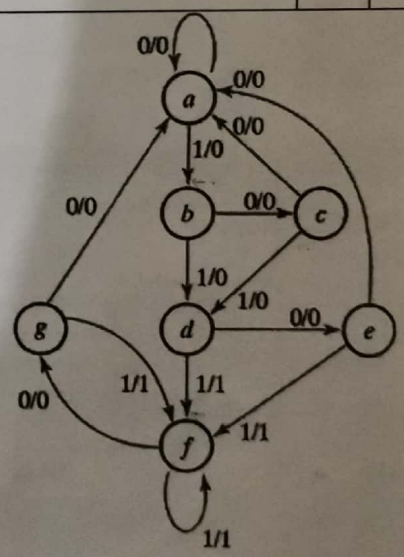

Fig.5a

BT-Blooms Taxonomy, CO-Course Outcomes, M-Marks

Marks Distribution	Particulars		CO1	CO2	CO3	CO4	L1	L2	L3	L4	L5	L6
	Test	Max Marks	8	13	17	22	5	21	24	10	-	-

****

Scanned with CamScanner

DEPARTMENT OF

Electronics and Communication Engineering

(Common to ECE,ETE,EEE,EIE)

Date	21/03/2023	**Maximum Marks**	60
Course Code	21EC34	**Duration**	110 Mins
Sem	III Semester	CIE 3	

ANALYSIS AND DESIGN OD DIGITAL CIRCUITS

Instructions to candidates:

i. *Part A must be answered within the first two pages of answer book.*

ii. *Assume the suitable data for missing values*

	PART-A	**M**	**BT**	**CO**
1	A processor unit employs a scratchpad memory and it consists of 128 registers of eight bits each. i) How many lines are needed for address? ii) How many lines are there for the input data?	2	2	3
2	What is the function performed by a parallel adder with inputs A and B with all bits of B made as logic 1 with C_{in}=1?	1	2	1
3	The shift register shown in Fig.1 is initially loaded with the bit pattern 1010. Subsequently the shift register is clocked, and with each clock pulse the pattern gets shifted by one bit position to the right. With each shift, the bit at the serial input is pushed to the left most position (MSB). The number of clock pulses required to have the content of the shift register 1010 again is_____ 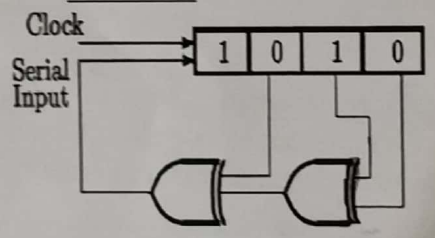 Fig.1	2	3	2
4	A 4-bit ripple counter consists of flip-flops, where each has a propagation delay of 15 ns. For the counter to recycle from 1111 to 0000, it takes a total of_____ time in Nano Seconds.	1	3	3
5	Number of BCD counters required to design mod-1000 counter is_____.	1	1	2
6	The sequence detected in the FSM given in Fig .6 is_____. 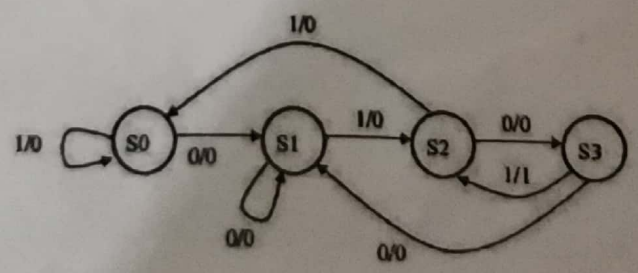 Fig.6	1	2	2

Scanned with CamScanner

7	A 4-bit serial in parallel out shift register is initially set to 1111. The data 1010 is applied to the input. After 3 clock pulses the output will be_____	2	3	4

PART-B

1a	Design a bidirectional shift register to perform following operations using suitable logic devices.	4	2	1

Mode		Operation
0	0	Shift Left
0	1	Complement the content of the register
1	0	Shift Right
1	1	Load parallel data

1b	Draw a serial adder using shift registers, 1-bit adder and a JK-FF. Write the state diagram for the same.	6	3	2
2a	Design a sequence detector circuit using D-FFs to detect an overlapping sequence 101 in the given sequence x= 01011010101110.	7	2	2
2b	Design a Johnson counter to generate 10 timing signals.	3	2	2
3	Design a 2-bit synchronous up-counter with parallel load facility using JK-FFs. The counter should have a Master Reset input, Load input and Terminal count indicator. By considering 4-bit synchronous up-counter using same logic as a black box, show the realization of counters for following sequences, i) 3-9 ii) 4-15.	10	4	4
4a	Design a ripple decade counter using JK-FFs without using PRESET and CLEAR signals and explain.	6	4	4
4b	With the help of block diagram, explain the bus organization of a processor.	4	2	2
5	Design an arithmetic and logic circuit with three selection variables $S_2S_1S_0$ that generate the following operations. Draw the logic diagram of one typical stage.	10	3	3

Arithmetic Operations					Logical Operations			
S_2	S_1	S_0	$C_{in}=0$	$C_{in}=1$	S_2	S_1	S_0	$C_{in}=X$
0	0	0	F=A	F=A+1	1	0	0	OR
0	0	1	F=A+B	F=A+B+1	1	0	1	XOR
0	1	0	F=A-B-1	F=A-B-1	1	1	0	AND
0	1	1	F=A-1	F=A	1	1	1	Complement

BT-Blooms Taxonomy, CO-Course Outcomes, M-Marks

Marks Distribution	Particulars		CO1	CO2	CO3	CO4	L1	L2	L3	L4	L5	L6
	Test	Max Marks	5	21	13	21	-	18	21	21	-	-

****

Scanned with CamScanner